KF-120 - CLAMP STEEL ANTENNA TO MAST

Length	**0,07 m**
Weight	**0,10 kg**

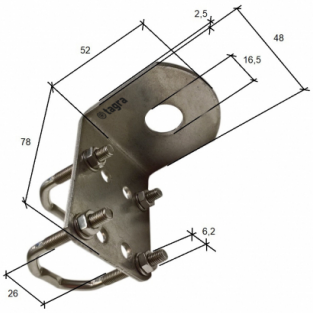

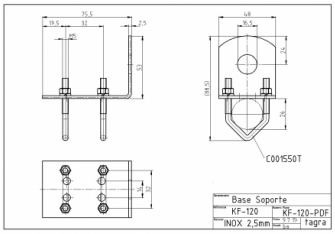

2.5 mm stainless steel sheet.

All specifications are subject to change without notice.